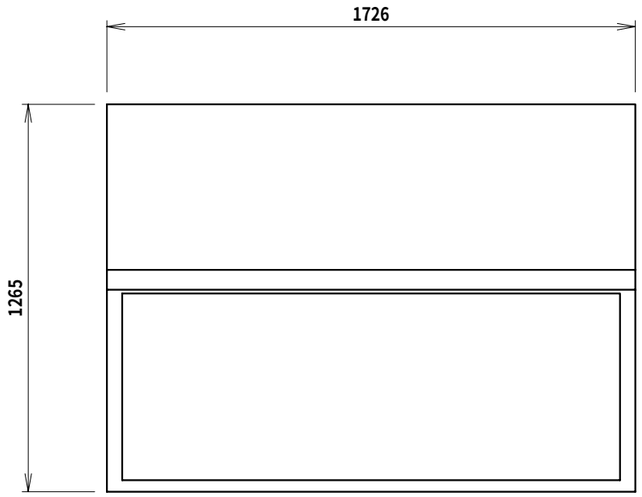

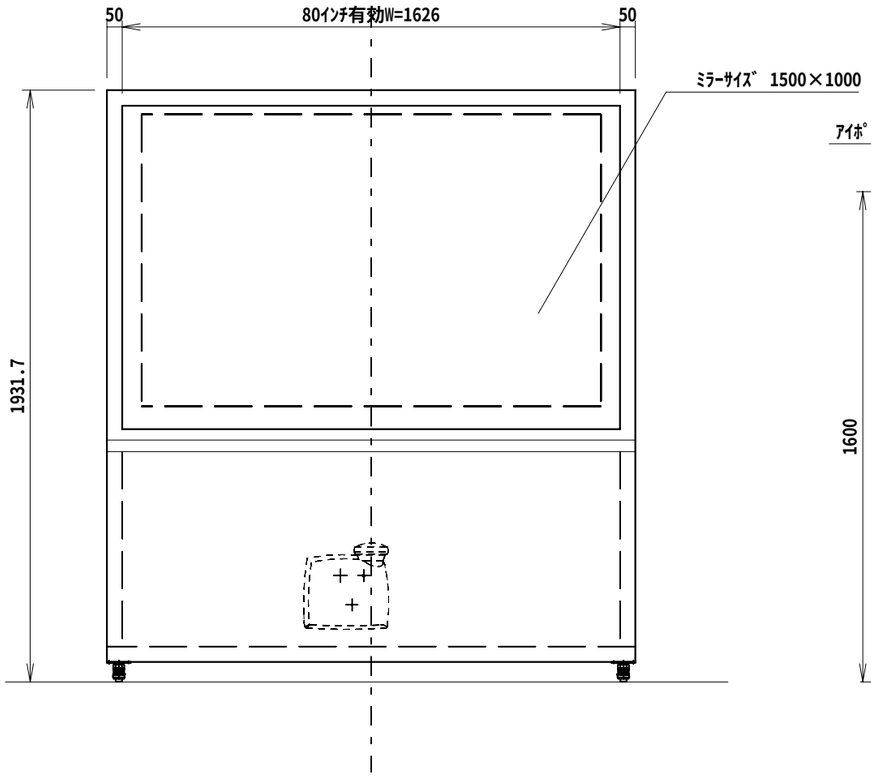

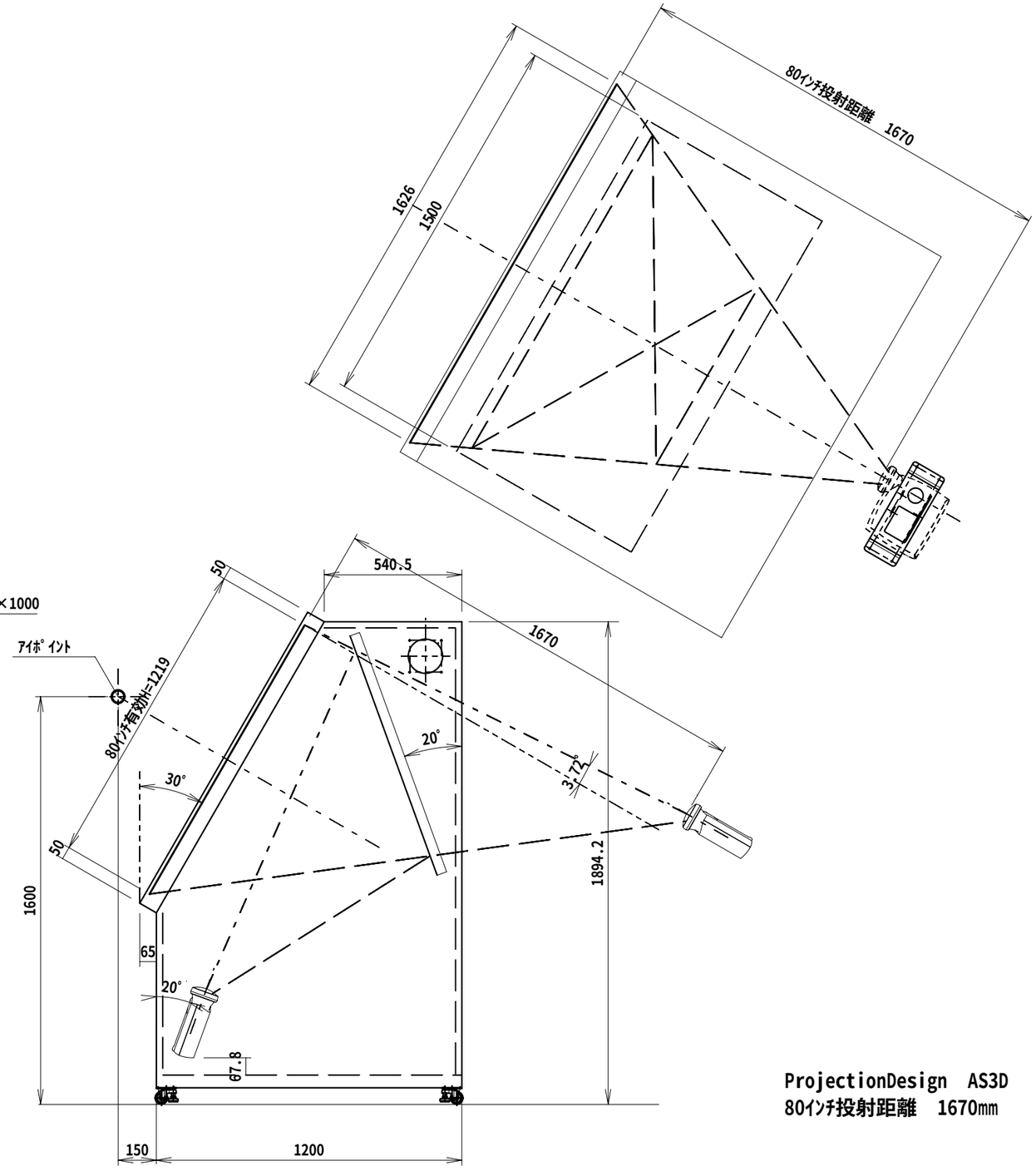

ProjectionDesign AS3D
80ｲﾝﾁ投射距離 1670mm

FiatLux.	DATE 2/OCT/2008	DRAWN BY HIRATA	TITLE 80ｲﾝﾁ傾斜ﾘｱｼｽﾃﾑ 1ﾐﾗｰ	
	SCALE 1/20 mm	PART NO, HIJ01A	AS3D	